User Manual

Tektronix

SD-22 & SD-26
Sampling Head

070–7226–03

Instrument Serial Numbers

Each instrument manufactured by Tektronix has a serial number on a panel insert or tag, or stamped on the chassis. The first letter in the serial number designates the country of manufacture. The last five digits of the serial number are assigned sequentially and are unique to each instrument. Those manufactured in the United States have six unique digits. The country of manufacture is identified as follows:

B010000	Tektronix, Inc., Beaverton, Oregon, USA
E200000	Tektronix United Kingdom, Ltd., London
J300000	Sony/Tektronix, Japan
H700000	Tektronix Holland, NV, Heerenveen, The Netherlands

Instruments manufactured for Tektronix by external vendors outside the United States are assigned a two digit alpha code to identify the country of manufacture (e.g., JP for Japan, HK for Hong Kong, IL for Israel, etc.).

Tektronix, Inc., P.O. Box 500, Beaverton, OR 97077

Printed in U.S.A.

Copyright © Tektronix, Inc., 1988, 1989, 1993. All rights reserved. Tektronix products are covered by U.S. and foreign patents, issued and pending. The following are registered trademarks: TEKTRONIX, TEK, TEKPROBE, and SCOPE-MOBILE.

WARRANTY

Tektronix warrants that this product will be free from defects in materials and workmanship for a period of one (1) year from the date of shipment. If any such product proves defective during this warranty period, Tektronix, at its option, either will repair the defective product without charge for parts and labor, or will provide a replacement in exchange for the defective product.

In order to obtain service under this warranty, Customer must notify Tektronix of the defect before the expiration of the warranty period and make suitable arrangements for the performance of service. Customer shall be responsible for packaging and shipping the defective product to the service center designated by Tektronix, with shipping charges prepaid. Tektronix shall pay for the return of the product to Customer if the shipment is to a location within the country in which the Tektronix service center is located. Customer shall be responsible for paying all shipping charges, duties, taxes, and any other charges for products returned to any other locations.

This warranty shall not apply to any defect, failure or damage caused by improper use or improper or inadequate maintenance and care. Tektronix shall not be obligated to furnish service under this warranty a) to repair damage resulting from attempts by personnel other than Tektronix representatives to install, repair or service the product; b) to repair damage resulting from improper use or connection to incompatible equipment; or c) to service a product that has been modified or integrated with other products when the effect of such modification or integration increases the time or difficulty of servicing the product.

THIS WARRANTY IS GIVEN BY TEKTRONIX WITH RESPECT TO THIS PRODUCT IN LIEU OF ANY OTHER WARRANTIES, EXPRESSED OR IMPLIED. TEKTRONIX AND ITS VENDORS DISCLAIM ANY IMPLIED WARRANTIES OF MERCHANTABILITY OR FITNESS FOR A PARTICULAR PURPOSE. TEKTRONIX' RESPONSIBILITY TO REPAIR OR REPLACE DEFECTIVE PRODUCTS IS THE SOLE AND EXCLUSIVE REMEDY PROVIDED TO THE CUSTOMER FOR BREACH OF THIS WARRANTY. TEKTRONIX AND ITS VENDORS WILL NOT BE LIABLE FOR ANY INDIRECT, SPECIAL, INCIDENTAL, OR CONSEQUENTIAL DAMAGES IRRESPECTIVE OF WHETHER TEKTRONIX OR THE VENDOR HAS ADVANCE NOTICE OF THE POSSIBILITY OF SUCH DAMAGES.

Table of Contents

List of Figures iii

List of Tables v

Introduction 1

Safety 3

Electrostatic Discharge 5

Connector Care 7

Installing the Sampling Head 9

Using the Sampling Head 11

- **Connecting Signals** 12
- **Button and Lights** 13
- **Instrument/Sampling Head Interaction** 14
  - Smoothing 14
  - External Attenuation 14
- **Displaying a Trace** 16

Adjusting Parameters 19

- **Stored Parameters** 20
- **Loop Gain** 21
  - Adjusting Loop Gain 22
- **Offset Null** 23
  - Adjusting Offset Null 23

Specifications 25

Glossary 29

Index 31

List of Figures

Figure 1: Block Diagram of the Sampling Head 2
Figure 2: Sampling Head Compartments in an 11801B and a CSA 803A 9
Figure 3: Installing a Sampling Head in an Instrument 10
Figure 4: Sampling Head Front Panel 11
Figure 5: The Sampling Head Fnc's Pop-Up Menu 15
Figure 6: The Calibrator Signal after Pressing Autoset 17
Figure 7: Displayed Trace at Various Loop Gain Settings 21

List of Tables

Table 1: Acquisition Electrical Specifications 25
Table 2: Environmental and Mechanical Specifications 27

Introduction

The SD-22 & SD-26 Sampling Heads are high-performance sampling heads that can be installed in the 11800 Series Digital Sampling Oscilloscopes, the SM-11 Multi-Channel Unit, and the CSA 803 Series Communications Signal Analyzers.

The SD-22 & SD-26 Sampling Heads provide the following features:

- Two independent channels for signal acquisition and measurements.
- An acquisition rise time of 28 ps for the SD-22 Sampling Head and 17.5 ps for the SD-26 Sampling Head.
- A typical bandwidth of 12.5 GHz for the SD-22 Sampling Head and 20 GHz for the SD-26 Sampling Head provide high-speed signal capture.
- Displayed noise is 400 μV_{RMS} typical without smoothing and 180μV_{RMS} with smoothing for the SD-22, or 750 μV_{RMS} typical and 350 μV_{RMS} typical for the SD-26. Older SD-26 Sampling Heads have a different noise specification; see Table 1 on page 25.
- Precision 3.5 mm connectors.
- A SELECT CHANNEL button for quick trace acquisition and selection from the sampling head front panel.

As shown in Figure 1, the sampling head has two independent channels, each with its own acquisition circuitry.

The strobe drive signal from the instrument controls the timing of the strobe assertion to each acquisition system, and guarantees sampling coincidence between the two channels.

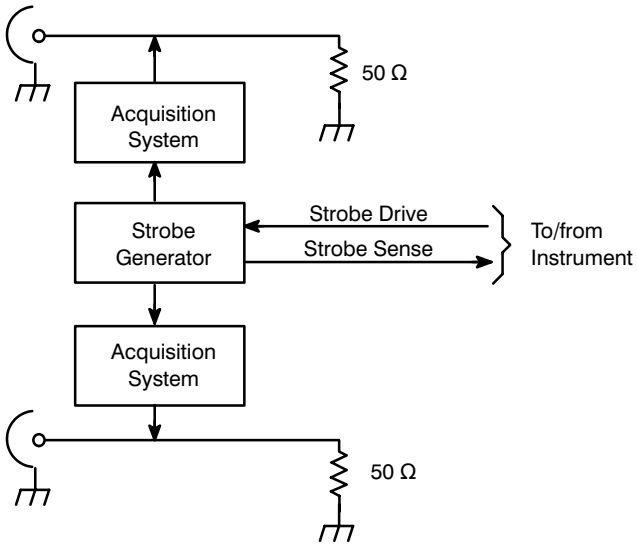

Figure 1: Block Diagram of the Sampling Head

The strobe sense signal is a part of the strobe signal returned to the instrument. The instrument monitors the time duration of the strobe drive/strobe sense loop and adjusts a delay inside the instrument to maintain correct strobe timing.

Safety

Terms in Manuals

CAUTION statements identify conditions or practices that could result in damage to the equipment or other property.

WARNING statements identify conditions or practices that could result in personal injury or loss of life.

Terms on Equipment

CAUTION indicates a personal injury hazard not immediately accessible as one reads the marking, or a hazard to property including the equipment itself.

DANGER indicates a personal injury hazard immediately accessible as one reads the marking.

Symbols in Manuals

Static Sensitive Devices

Symbols on Equipment

DANGER
High Voltage

Protective
ground (earth)
terminal

ATTENTION
Refer to
manual

Grounding the Instrument

The sampling head is grounded through the instrument. To avoid electric shock, make sure that the instrument is plugged into a properly wired receptacle where earth ground has been verified by a qualified service person. Without the protective ground, all parts of the instrument and the sampling head are shock hazards. This includes knobs and controls that may appear to be insulators.

Do Not Operate in Explosive Atmospheres

The sampling head provides no explosion protection from static discharges or arcing components. Do not operate the instrument in an atmosphere of explosive gases.

Electrostatic Discharge

To prevent electrostatic damage to the instrument and sampling heads, follow the precautions described in this manual and the manuals accompanying your instrument.

Acquisition circuitry in the sampling heads is very susceptible to damage from electrostatic discharge and from overdrive signals and DC voltages. Be sure to operate the sampling head only in a static-controlled environment. Be sure to discharge to ground any electrostatic charge that may be present on cables before attaching the cable to the sampling head.

CAUTION

To prevent damage from electrostatic discharge, install short-circuit terminations on the sampling head connectors before removing from an instrument or storing a sampling head. Store the sampling head in a static-free container, such as the shipping container. Whenever you move the sampling head from one instrument to another, use a static-free container to carry the sampling head.

Always use a wrist strap (provided with your instrument) when handling sampling heads or making connections.

Connector Care

The front of the sampling head has two precision 3.5 mm connectors, one for each channel. They are for attaching the signal cable or the device under test. These are high-precision connectors with a mechanical tolerance that is closer than the tolerance in standard SMA cables. Never attach a cable to a sampling head connector if the cable has a worn or damaged connector because the sampling head connector may be damaged.

Use extra care when attaching or removing a cable from the connectors. Turn only the nut, not the cable. When attaching a cable to a sampling head connector, align the connectors carefully before turning the nut. Use light finger pressure to make this initial connection. Then tighten the nut lightly with a wrench.

For best repeatability and to prolong the life of both connectors, use a torque wrench and tighten the connection to the range of 7–10 lb-in (79–112 N-cm).

If you are using sampling head connectors extensively, such as in a production environment, you should install adapters (for example, connector savers) on the sampling head to make connections to the device under test.

Installing the Sampling Head

The SD-22 and SD-26 Sampling Heads fit into the front panel of a compatible instrument, such as the 11801 Series Digital Sampling Oscilloscopes or CSA 803 Series Communications Signal Analyzers. Figure 2 shows the front panels of an 11801B Digital Sampling Oscilloscope and a CSA 803A Communications Signal Analyzer and the locations of the sampling head compartments. Note that on the CSA 803 Series, only two compartments provide signal acquisition capability. The other two compartments only provide power, for example to power an optical-to-electrical converter.

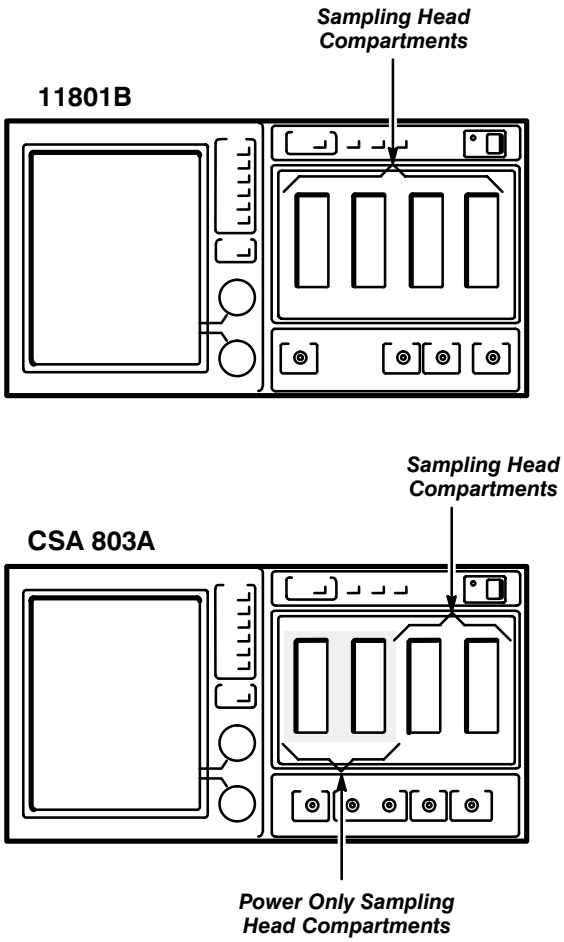

Figure 2: Sampling Head Compartments in an 11801B and a CSA 803A

At least one sampling head must be installed in an 11800 Series or a CSA 803 Series instrument to sample signals.

CAUTION

To prevent damage to the sampling head or instrument, never install or remove a sampling head when the instrument's PRINCIPAL POWER SWITCH is ON (powered-on).

To install a sampling head, first power-off the instrument. Then place the sampling head in a compartment and slowly push it in with firm pressure. Once the head is seated, turn the lock-down screw on the sampling head to tighten the sampling head into place. See Figure 3.

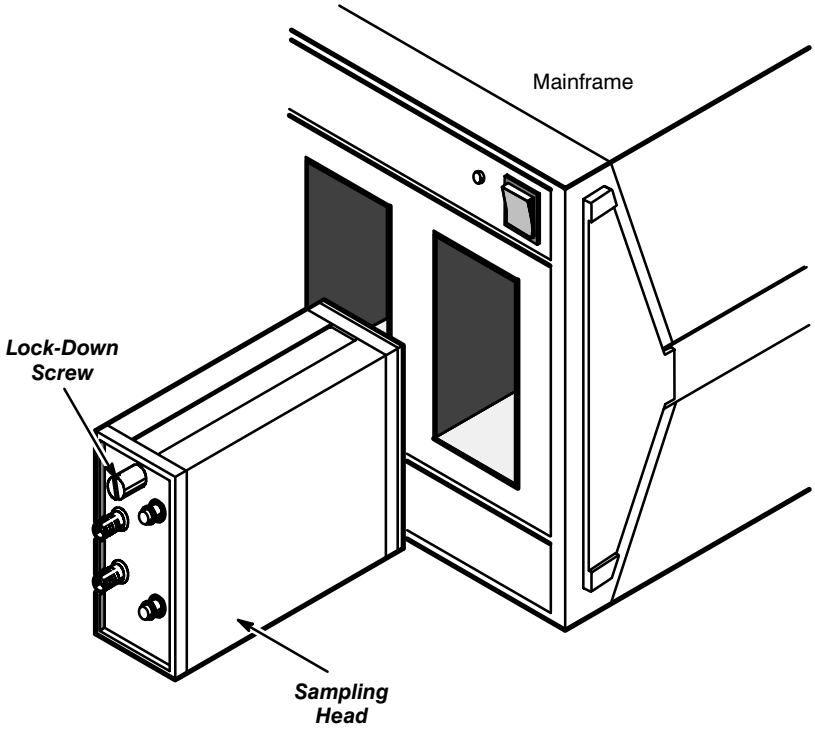

Figure 3: Installing a Sampling Head in an Instrument

Using the Sampling Head

Figure 4 shows the front panel of the sampling head and identifies the buttons, lights, and connectors.

Each channel has a 3.5 mm connector for signal input/pulse output, a SELECT CHANNEL button, and a yellow channel indicator light.

CAUTION

Applying a voltage outside the range ±3 V can result in damage to the sampling head or instrument. Use a wrist strap to prevent electrostatic damage to the sampling head or instrument.

The input diodes used in the sampling heads are very susceptible to damage from overdrive signals, DC voltages and electrostatic discharge. Never apply a voltage outside the range of ±3 V. Only operate the instrument and sampling head in a static-controlled environment.

Always use a wrist strap when handling sampling heads or making connections.

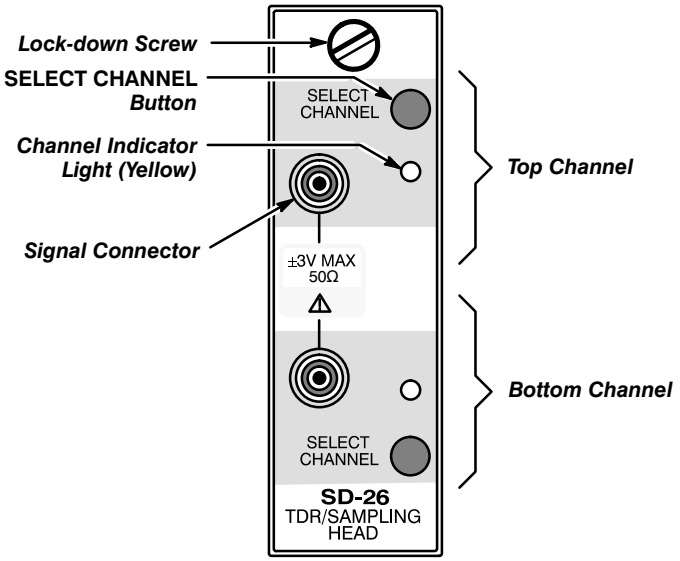

Figure 4: Sampling Head Front Panel

Connecting Signals

The signal connectors for each channel let you connect signals that you want to sample. These are precision 3.5 mm connectors that are mechanically compatible with the SMA standard.

The input impedance is 50 Ω.

Use extra care with the sampling head connectors. See Connector Care earlier in this manual.

Button and Lights

Each channel has a SELECT CHANNEL button and a yellow channel light.

The channel light can have three states: off, on steady, or blinking. The operation of the channel button depends on the state:

- If the yellow light is off, then the channel is not acquiring trace data, and no trace is displayed from that channel. When the light is off and you press the SELECT CHANNEL button, the channel acquires trace data and displays a trace. The signal input from that channel creates the selected trace, so now the yellow light blinks.
- If the yellow light is on steady, the channel is acquiring trace data. The trace data is displayed as a single trace and/or may be part of another displayed trace. However, the trace is not the selected trace. When the light is on steady and you press the SELECT CHANNEL button, the trace becomes selected and the light blinks.
- If the yellow light is blinking, the channel is a part or all of the selected trace. When the light is blinking and you press the button, *all* traces displaying that channel are removed. The channel stops acquisitions and the yellow light turns off.

Instrument/Sampling Head Interaction

The sampling head is a part of a larger system. Most of the sampling head functions are controlled automatically from the instrument. These functions include vertical scaling and horizontal sampling rate. You do not directly control these parameters; they are tasks that the instrument performs. From the instrument you can also select smoothing and External Channel Attenuation. Smoothing reduces the noise in the signal before it is digitized.

External Channel Attenuation enables you to enter a number representing any external attenuation you have added to a channel.

Smoothing

There are two ways to set smoothing: from the instrument front panel or by sending a command from an ASCII interface.

To control smoothing from the front panel, access the Waveform major menu and the **Sampling Head Fnc's** pop-up menu. Figure 5 shows these two menus.

First select the channel for which you want to set smoothing. The **Selected Channel** section of the pop-up menu selects the channel. Touch the **Smoothing** selector to turn smoothing on or off.

To set smoothing on or off from a remote interface (IEEE-488 or RS-232-C) use the following command:

- `CH<alpha><ui> SMOOTHING: ON | OFF`

where *<alpha>* indicates the unit letter (M for mainframe or A, B, C, or D for an SM-11 Multi-Channel unit; for the CSA 803 Series *<alpha>* is always M) and *<ui>* indicates the channel number for the channel you want to affect. For complete information about how to use the sampling head to display traces, see the appropriate *User Manual* for your instrument.

External Attenuation

To set External Channel Attenuation, use the following command:

- `CH<alpha><ui> EXTAttenuation: <NRx>`

where *<alpha>* indicates the unit letter (M for mainframe or A, B, C, or D for an SM-11 Multi-Channel unit; for the CSA 803 Series *<alpha>* is always M) and *<ui>* indicates the channel number for the channel you want to affect. For complete information about how to use the sampling head to display traces, see the appropriate *User Manual* for your instrument.

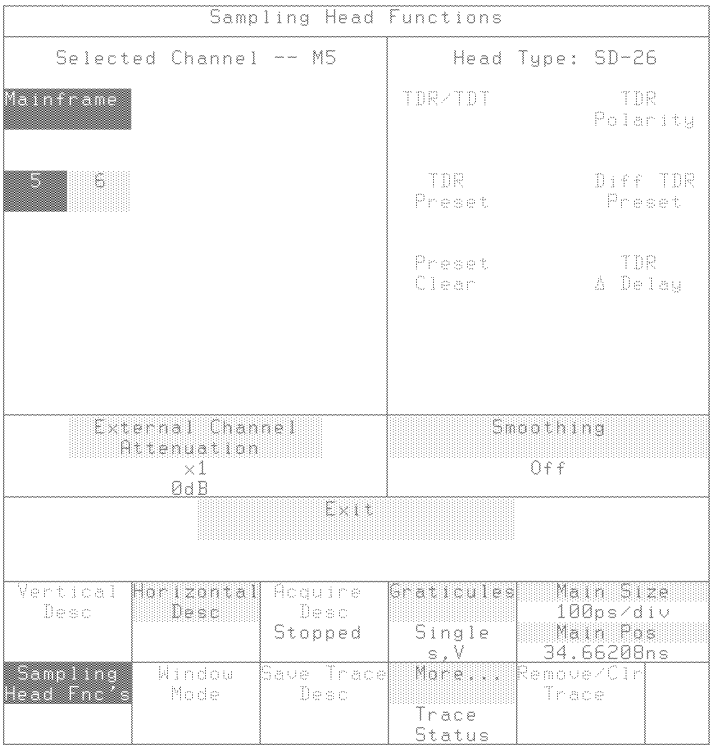

Figure 5: The Sampling Head Fnc's Pop-Up Menu

Displaying a Trace

The following example shows you how to acquire and display a trace with the sampling head and using an 11800 Series or CSA 803 Series instrument. For this procedure you will need one 8-inch SMA cable.

- ☐ **Step 1:** Initialize the instrument to default settings using the **Initialize** selector which appears in the Utility major menu.
- ☐ **Step 2:** Connect your wrist strap to the antistatic connector on the front of your instrument.
- ☐ **Step 3:** Connect an SMA cable from the CALIBRATOR output to either input connector of any installed sampling head.
- ☐ **Step 4:** From the Trigger major menu, set the trigger source to internal.
- ☐ **Step 5:** Press the SELECT CHANNEL button nearest the sampling head input you have connected to the calibrator.

The yellow light on the sampling head blinks, indicating that the channel acquisition circuit is enabled and output from the channel is the selected trace.

- ☐ **Step 6:** Press the AUTOSET button above the sampling heads.

A display should appear similar to Figure 6.

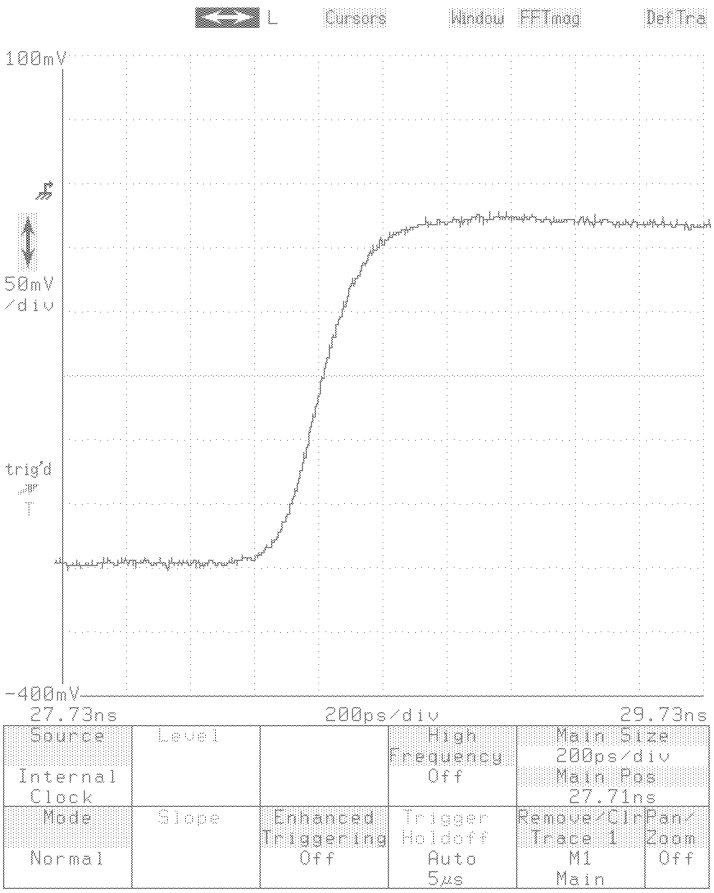

Figure 6: The Calibrator Signal after Pressing Autoset

For detailed information about acquiring, displaying, and measuring traces, see the *User Manual* for your instrument.

Adjusting Parameters

To get the best performance from your sampling head, you may need to adjust sampling head parameters. These parameters affect how the sampling head acquires signals and affect the accuracy of the resulting trace.

Typically, you may want to adjust sampling head parameters whenever you have moved the sampling head to another slot or if the ambient temperature has changed $\pm 5^\circ$ C since the parameters were last adjusted. At the factory, the parameters are set in an environment with an ambient temperature of 25° C.

You can adjust sampling head parameters at any time. However, during the warm-up period, the values may change as the temperature varies. You should adjust the sampling head parameters after the instrument has been on for at least 20 minutes.

NOTE

You should adjust the sampling head parameters after a 20-minute warm-up period.

You can adjust the following two parameters on your sampling head:

- Loop gain
- Offset null

The actual procedure for performing the adjustment depends on the instrument. For the 11800 Series Oscilloscopes and the CSA 803 Series Communications Signal Analyzers, you can use the Enhanced Accuracy feature to adjust sampling head parameters. It is a quick and simple process. See the appropriate instrument's *User Manual* for instructions to perform these adjustments.

Stored Parameters

The sampling head contains nonvolatile memory that stores two values, the factory default value and the user constant, for each of the above parameters. These values always remain in the sampling head, even if you remove the sampling head from the instrument.

The factory default values for the sampling head parameters are set at the factory and are appropriate for many conditions.

If you decide to adjust a sampling head parameter, the new parameter is immediately applied to the head, but is lost when you power-off the instrument. However, you can store the new parameter value as the user constant. The user constants are stored in an EEPROM in the sampling head, so that they are not lost at power-off and are restored at power-on.

Note that if you initialize the instrument mainframe, the user constants for the sampling head parameters are unaffected.

If you are not confident in the current user value for a sampling head parameter, you can assign the user parameter value to equal the factory default value. The factory default value offers a reasonable parameter value for many conditions. See the appropriate instrument's *User Manual* for more information.

Loop Gain

Loop gain determines the accuracy with which the sampling head accurately follows an input voltage change that occurs between two adjacent samples. The accuracy of the sampling head output as it follows the input signal is termed the dot transient response.

When loop gain is unity (1), the value of the first sample acquired after an input voltage change accurately reflects the voltage change, indicating a good dot transient response.

If loop gain is adjusted too low, the value of the first sample acquired after an input voltage change will lie somewhere between the value of the last sample and the new voltage.

If loop gain is adjusted too high, the value of the first sample acquired after the input voltage change will be greater than the new voltage level.

Figure 7 shows displayed trace results for the three loop gain conditions.

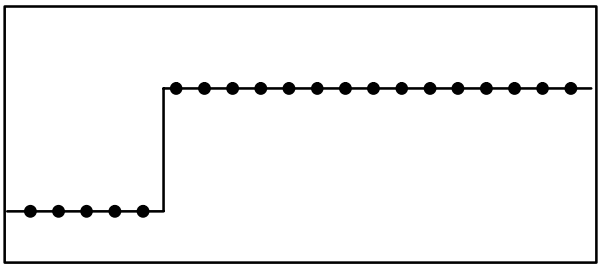

Unity Loop Gain

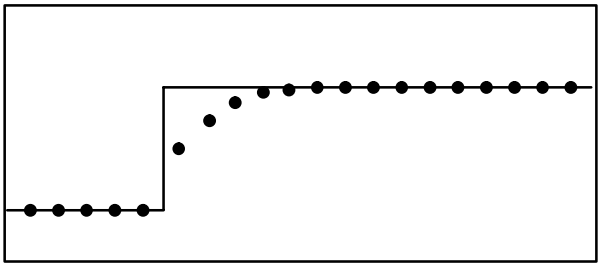

Insufficient Loop Gain

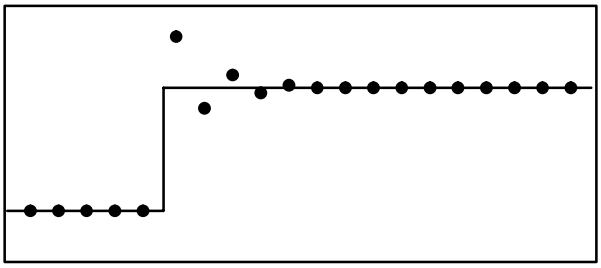

Excessive Loop Gain

Figure 7: Displayed Trace at Various Loop Gain Settings

Adjusting Loop Gain

You can adjust loop gain automatically or manually from the Enhanced Accuracy menu. If you prefer to adjust loop gain manually, the 11800 Series and CSA 803 Series instruments also provide a divide-by-two feature. This feature is helpful if you are using the Calibrator signal to adjust loop gain. You can also use the divide-by-two feature if you are using the trigger output of the instrument to trigger an external generator.

You might consider adjusting the loop gain whenever you are sampling a trace that has peak-to-peak voltages and transition-speed characteristics that are substantially different from the previous trace. In this case, you can use the actual signal that you want to measure and turn off vectoring so that you can see each sample individually.

For instructions on how to adjust the loop gain, see the Enhanced Accuracy section in the *User Manual* for your instrument.

The sampling head contains nonvolatile memory that stores two values, the factory default value and the user value, for the loop gain adjustment. These were discussed at the beginning of this section.

Offset Null

The offset null adjustment removes unwanted DC offset that may be present in the sampling head. This adjustment effectively zeroes the sampling head so that an input signal with 0 V of amplitude delivers a 0 V output.

If offset null is not adjusted correctly, measurements taken at the instrument will be incorrect. The absolute voltage values for any cursors displayed in the trace will also be incorrect.

Adjusting Offset Null

For the 11800 Series and the CSA 803 Series instruments, you can adjust offset null automatically or manually from the Enhanced Accuracy menu. If you prefer to adjust offset null manually, be sure to adjust the loop gain first.

To adjust offset null, terminate the channel INPUT connector with a 50 Ω termination and adjust the offset null (using the knob) so that the displayed trace is set to the 0 V position on the screen.

If you adjust offset null manually, the offset null setting is valid only for the current setting of the smoothing parameter (on or off).

For example, if smoothing is set to off and you adjust offset null manually, the offset null value will be invalid if you then turn smoothing on. However, the sampling head retains the offset null values when smoothing is on and off, so if you change the smoothing setting, the correct offset null value is applied.

Note that the sampling head stores four offset null values: the two factory default values for when smoothing is on and smoothing is off, and the two user constants for when smoothing is on and when smoothing is off.

Also, if you adjust offset null automatically using the Enhanced Accuracy menu, the 11800 Series and the CSA 803 Series instruments adjust both offset null values (smoothing on and smoothing off).

Specifications

Table 1: Acquisition Electrical Specifications

Characteristics	Specifications
Bandwidth	SD-22: 12.5 GHz typical SD-26: 20 GHz typical
Sampling Repetition Rate	
Maximum	200 kHz
Minimum	100 Hz
Rise Time	SD-22: 28 ps or less, 10% to 90% SD-26: 17.5 ps or less, 10% to 90%
Aberrations	
10 ns to 20 ps before step	±3% or less, typical
<300 ps after step	+10%, −5% or less, typical
300 ps to 5 ns after step	±3% or less, typical
5 ns to 100 ns	±1% or less, typical
elsewhere	±0.5% or less, typical
Maximum Safe Input Signal Voltage	±3 V
Maximum Operating Input	1.6 $V_{p\text{-}p}$ (AC plus offset)
Maximum Signal Voltage	1.0 $V_{p\text{-}p}$
Dot Transient Response	
Accuracy after calibration at operating temperature	±5% for signals up to 0.5 $V_{p\text{-}p}$
Adjustment Range	Adjustable to unity for signals up to 1.0 $V_{p\text{-}p}$

Table 1: Acquisition Electrical Specifications (Cont.)

Characteristics	Specifications
Displayed Noise SD-22	
Unity Dot Response	800 μV_{RMS} max, 400 µV typical
With Smoothing	400 μV_{RMS} max, 180 µV typical
SD-26 (SN B020440 & above)	
Unity Dot Response	1.2 mV_{RMS} max, 750 μV_{RMS} typical
With Smoothing	550 μV_{RMS} max, 350 μV_{RMS} typical
SD-26 (SN B020339 & below)	
Unity Dot Response	1.3 mV_{RMS} typical
With Smoothing	600 μV_{RMS} typical
Input Termination Impedance	50 $\pm$0.5 Ω
Isolation Between Channels	$\leq$1% p-p voltage transmission from the channel driven by the 067−1338−00 to the quiescent channel
Time Coincidence Between Channels	
Accuracy	10 ps
Stability	<0.2 ps/° C

Table 2: Environmental and Mechanical Specifications

Characteristics	Specifications
Weight	314 grams (11 oz)
Height	71.05 mm (2.9 in)
Width	23.28 mm (0.95 in)
Depth	91.39 mm (3.8 in)
Ambient Temperature	
Operating	0° C to 50° C (32° F to 122° F)
Non-operating	−40° C to 75° C (−40° F to 167° F)
Altitude	
Operating	to 4.5 km (15,000 feet)
Non-operating	to 15 km (50,000 feet)
Humidity	to 95% relative humidity at up to 50° C (122° F)
MilSpec	Meets MIL−T−28800E, Type III, Class 5
Electromagnetic Compatibility	
United States	MIL−STD−461B: CE−03 Pt 4 Curve 1, CS−01 Pt 7, CS−02 Pt 4, CS−06 Pt 5, RE−02 Pt 7, RS−01 Pt 4, RS−02, Pt 5, RS−03 Pt 7 (limited to 1 GHz)

Glossary

Autoset
A means of letting the instrument mainframe set itself to provide a stable and meaningful display of a given trace.

Channel
A place to connect a signal or attach a network or transmission line to sampling heads. Also, the smallest component of a trace expression.

Channel Number
The number assigned to a specific signal input connector. The top channel of the left-most sampling head compartment of the instrument mainframe is always mainframe channel 1, regardless of any repositioning or omission of sampling heads.

Default Measurement Parameter
A value from the default set of measurement parameters. The operator can change the default values. Whenever a trace is created, the measurement parameters are copied from the default set.

Initialize
Setting the instrument mainframe to a completely known, default condition.

Internal Clock
A trigger source that is synchronized with the Calibrator signal.

Setting
The state of the front panel and system at a given time.

Smoothing
Processing applied by the sampling head prior to the digitization of a trace, to reduce apparent noise. With smoothing, the sampling head samples the signal 8 times instead of once, and the average of the samples is then used by hardware measurements and the digitizing circuitry.

Trigger
An electrical event that initiates acquisition of a trace as specified by the time base.

Waveform
The visible representation of an input signal or combination of signals. Identical to trace.

Index

A

Acquisition
- circuitry, *1*
- rise time, *1*

ASCII interface command, *14*

B

Bandwidth, *1*

C

Circuitry, *2*

Connectors, 7, *12*

E

Electro-static discharge, precautions, *5*

Enhanced Accuracy, *19*

F

Factory defaults, *20*

Front panel
- buttons, *11*, *13*
- connectors, *12*
- lights, *11*, *13*

I

Input voltage, maximum, *11*

Installing, *10*

L

Loop gain
- adjusting, *22*
- description, *21*

O

Offset null
- adjusting, *23*
- description, *23*

P

Parameters, adjusting, *19*

R

Remote interface, *14*

Removing, *10*

Rise time, acquisition, *1*

S

Sampling head parameters
- loop gain, *19*, *20*, *21*, *22*
- offset null, *19*, *23*
- stored, *20*

SELECT CHANNEL button, *11*, *13*

Smoothing, *14*

Stored parameter values, *20*, *23*

T

Trace display, *16*, *17*

U

User constants, *20*